JESSICA

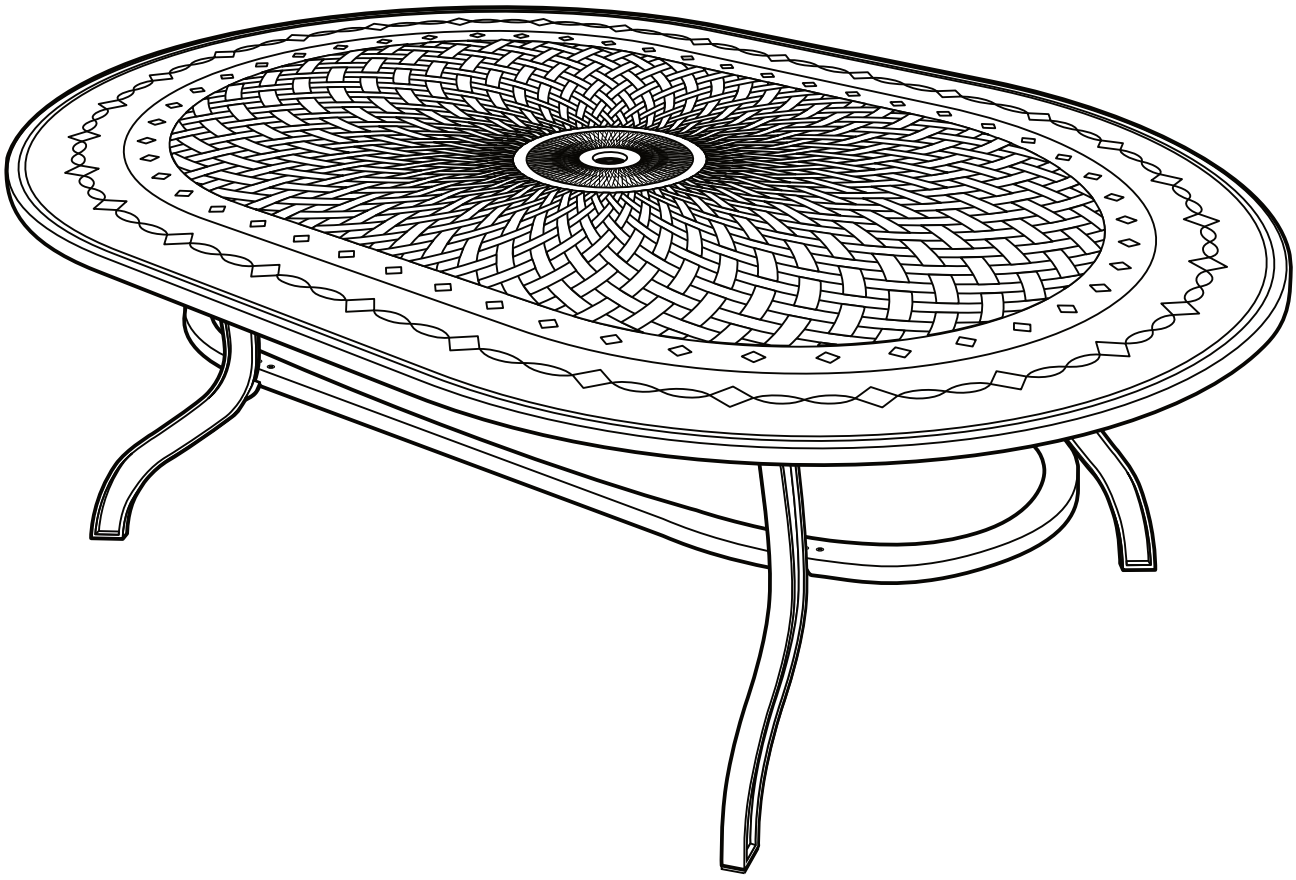

Lazy Susan

H-1-JESS-TBL-SL

1

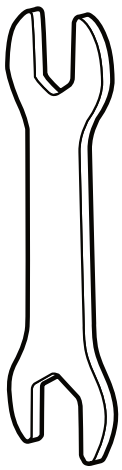

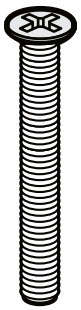

H-M8-57MM-HD-BOLT-SL

8x

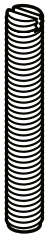

H-M8-35MM-BOLT

8x

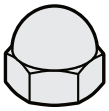

H-M8-NUT-CAP-SL

16x

H-M8-NUT

16x

H-M8-WASHER

16x

H-M8-SPRING-WASH

16x

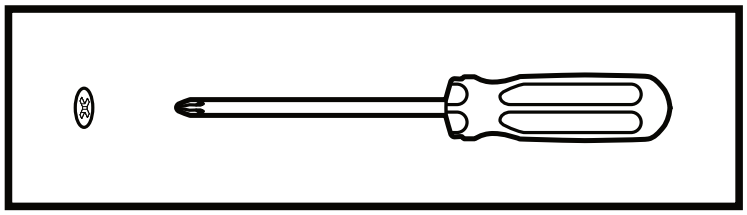

2

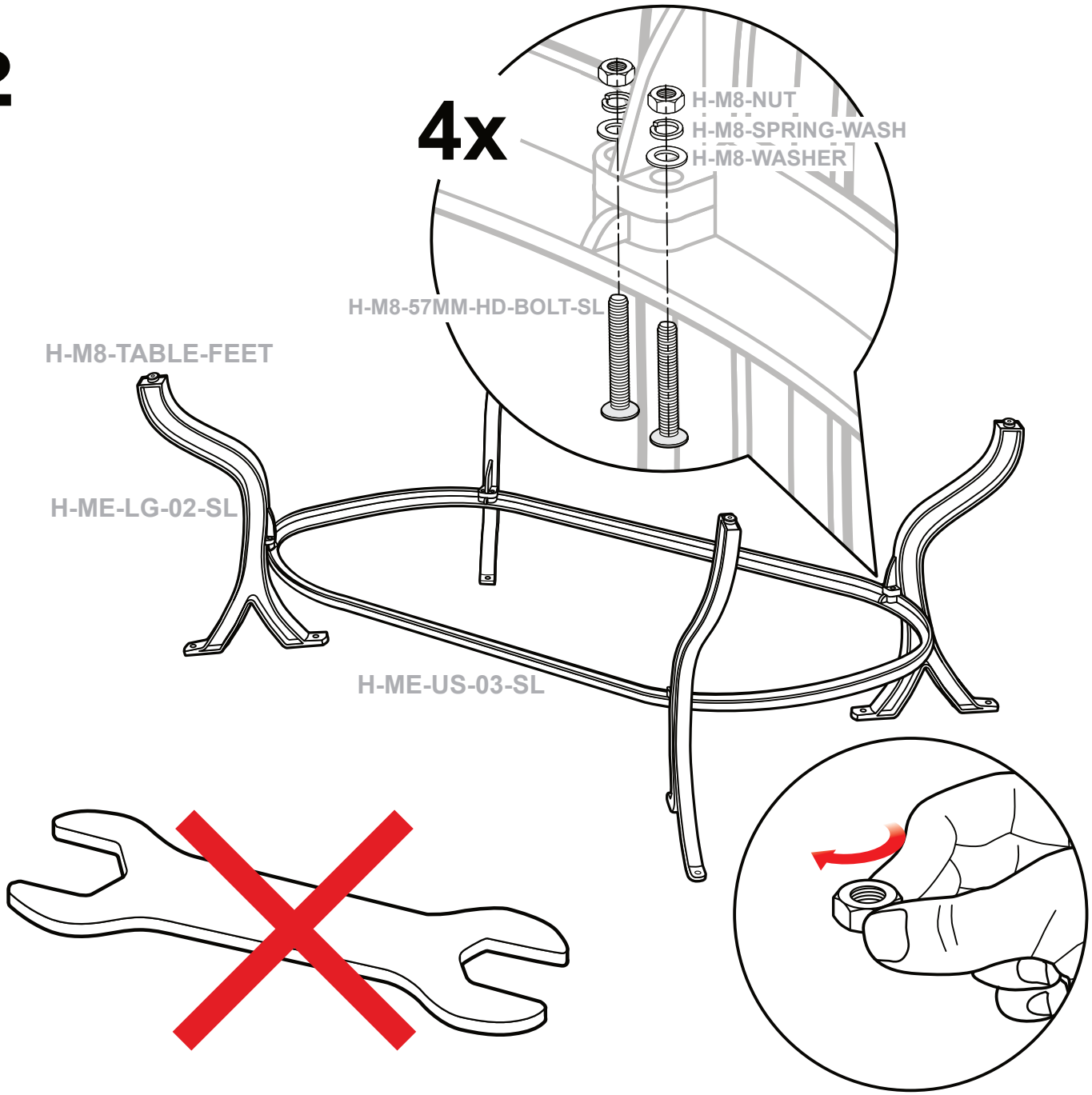

3

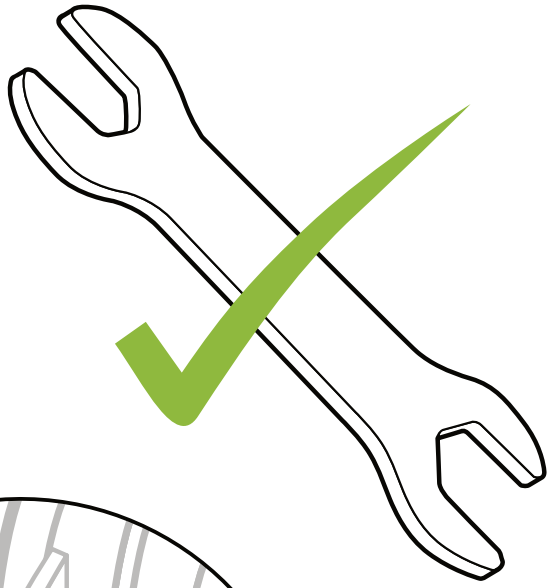

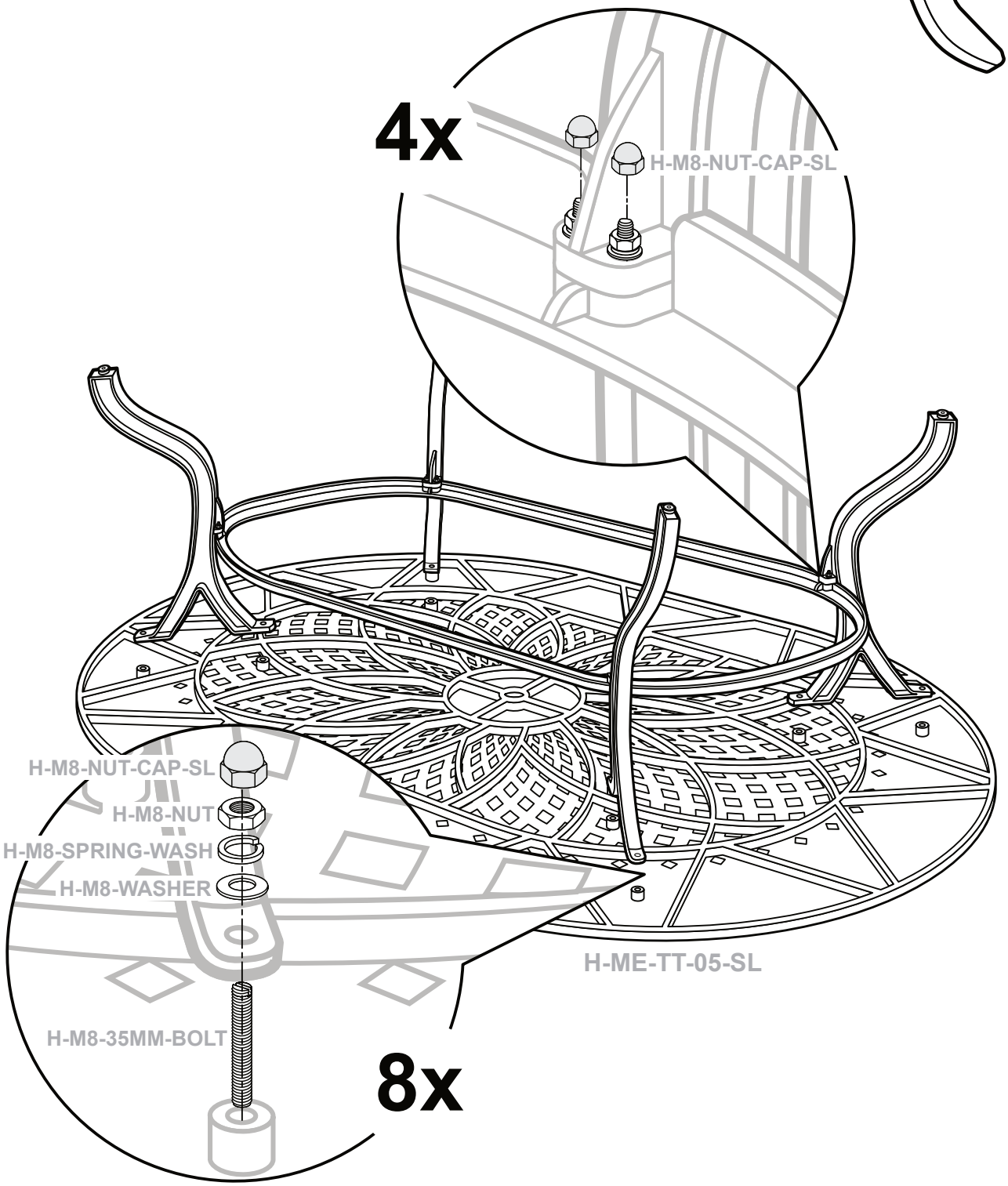
4x
H-M8-NUT-CAP-SL
H-M8-NUT-CAP-SL
H-M8-NUT
H-M8-SPRING-WASH
H-M8-WASHER
H-ME-TT-05-SL
H-M8-35MM-BOLT
8x